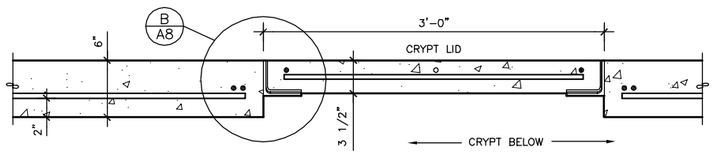

A CRYPT HATCH DETAIL
Scale: 1-1/2" = 1'-0" D:\CAD\0302\DETAILS

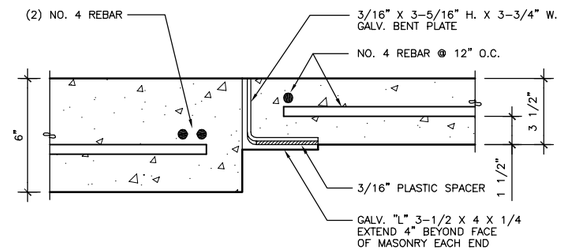

B CRYPT HATCH BEARING DETAIL
Scale: 3" = 1'-0" D:\CAD\0302\DETAILS

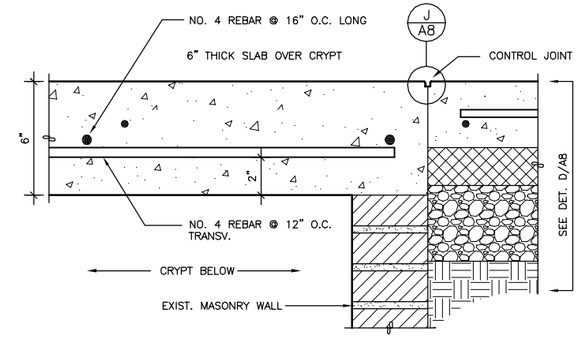

C CRYPT TOP & SLAB DETAIL
Scale: 3" = 1'-0" D:\CAD\0302\DETAILS

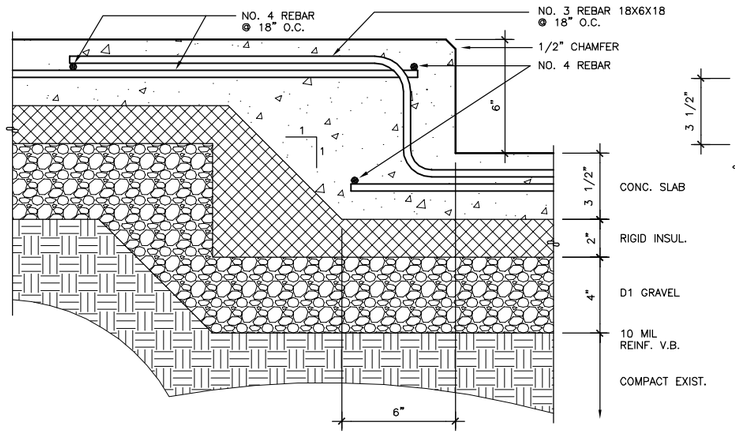

D CONCRETE SLAB STEP DETAIL
Scale: 3" = 1'-0" D:\CAD\0302\DETAILS

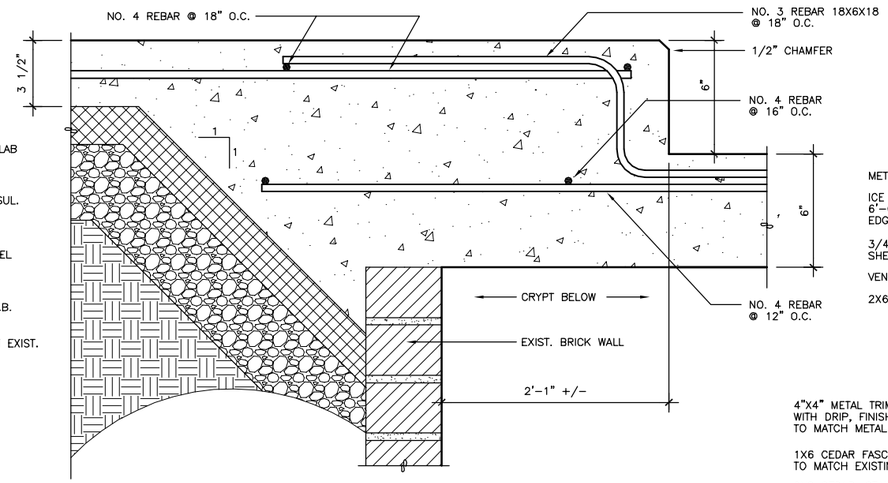

E CONCRETE STEP @ CRYPT LID DETAIL
Scale: 3" = 1'-0" D:\CAD\0302\DETAILS

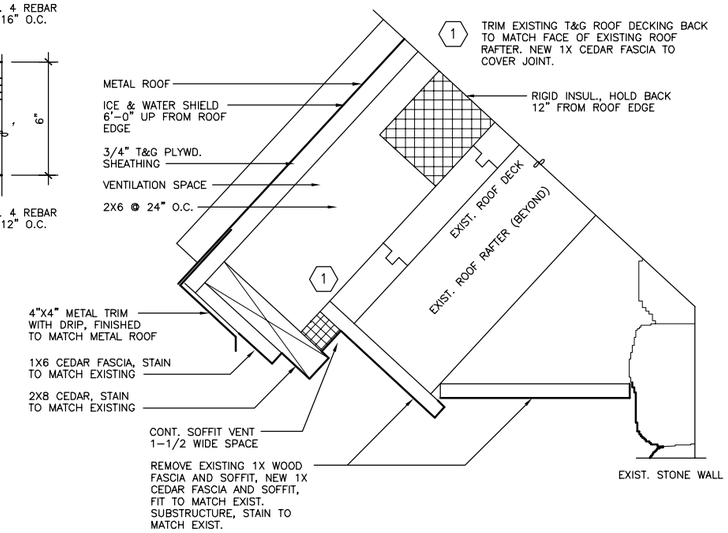

F EAVE DETAIL (TYP.)
Scale: 3" = 1'-0" D:\CAD\0302\DETAILS

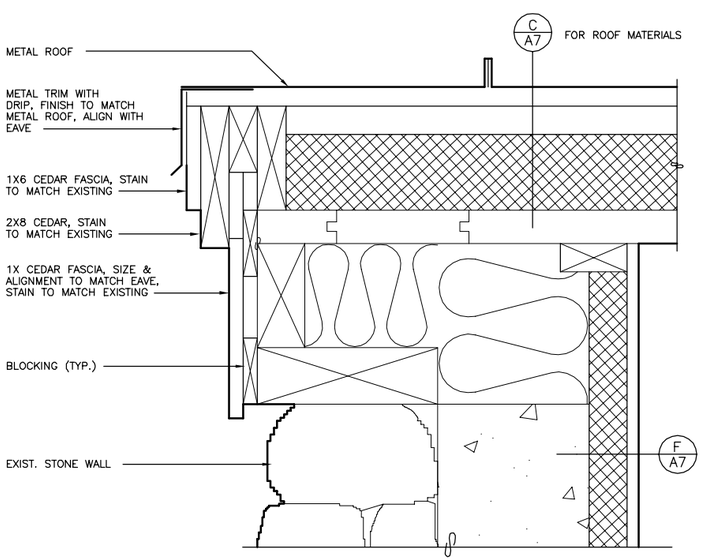

G RAKE DETAIL (TYP.)
Scale: 3" = 1'-0" D:\CAD\0302\DETAILS

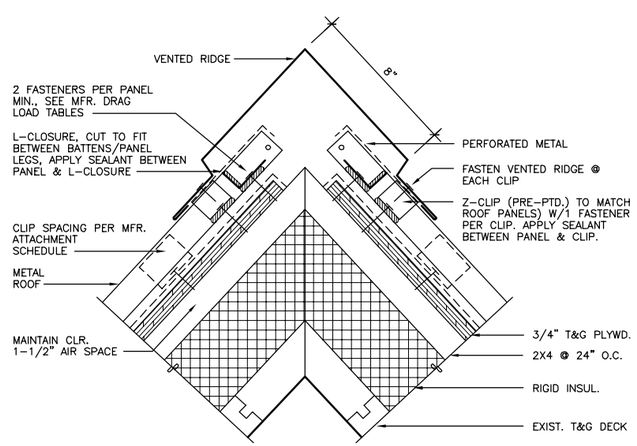

H VENTED RIDGE DETAIL
Scale: 3" = 1'-0" D:\CAD\0302\DETAILS

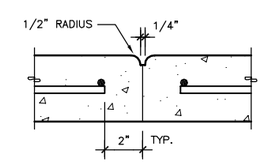

J CONCRETE CONTROL JOINT DETAIL (TYP.)
Scale: 3" = 1'-0" D:\CAD\0302\DETAILS

NOTE:

RADIANT HEATING LOOPS EMBEDDED IN CONCRETE NOT SHOWN FOR CLARITY.

0 4" 8" 16" 24"
1-1/2"= 1'-0"

0 2" 4" 8" 12"
3"= 1'-0"

A.E. Rogers
ARCHITECTS, LL
P.O. Box 34401 • Juneau, Alaska 998
Tele 907.789.7589 Fax 907.789.16

STATE OF ALASKA 49th Alan E. Rogers No. A-5582 REGISTERED PROFESSIONAL ARCHITECT

CBJ BLDG. Permit No. BLD2003-00762

CONSTRUCTION DOCUMENTS

Shrine of St. Therese
CHAPEL RENOVATION

Catholic Diocese of Juneau
419 6th Street
Juneau, Alaska 99801

Number	Date	By	Description of Revisions

Sheet Title
DETAILS

Scale AS SHOWN (11 X 17 = HALF SCALE)
Designed AER Drawn AER
Date DEC. 15, 2003 Checked AER
Approved By AER Job Number 0302

Sheet Number
A8 OF 1